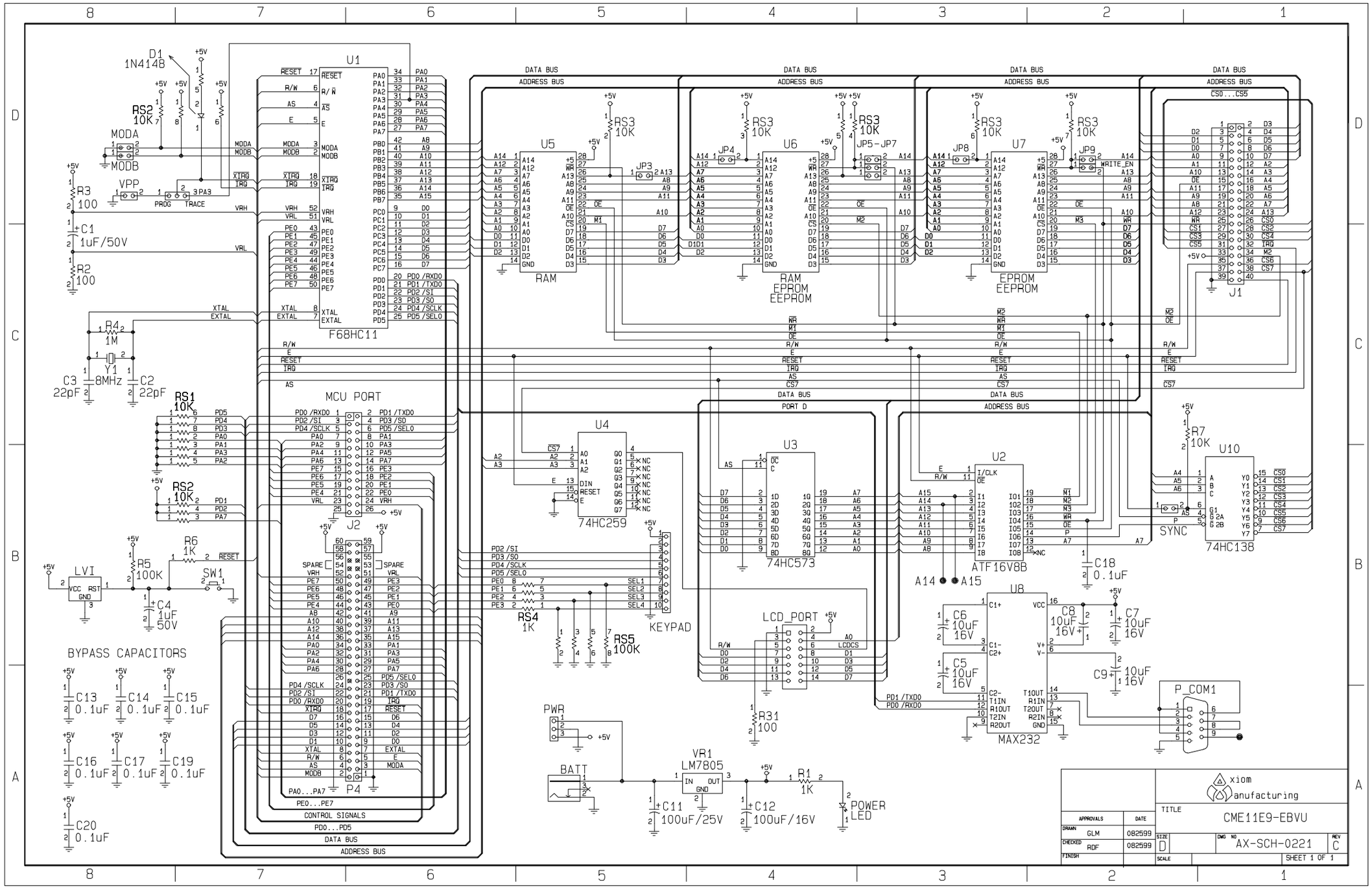
U1
F68HC11
U5
RAM
U6
RAM
EPROM
EEPROM
U7
EPROM
EEPROM
J1
U4
74HC259
U3
74HC573
U2
ATF16V8B
U10
74HC138
SYNC
U8
MAX232
P_COM1
MCU PORT
J2
P4
KEYPAD
LCD_PORT
PWR
BATT
VR1
LM7805
POWER
LED
BYPASS CAPACITORS
CONTROL SIGNALS
DATA BUS
ADDRESS BUS
PORT D
xiom
anufacturing
TITLE
CME11E9-EBVU
APPROVALS
DATE
DRAWN
GLM
082599
CHECKED
RDF
082599
FINISH
SIZE
D
DWG NO
AX-SCH-0221
REV
C
SCALE
SHEET 1 OF 1